B,C,D-Parts

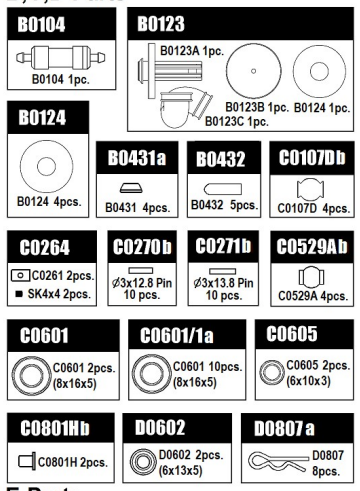

E-Parts

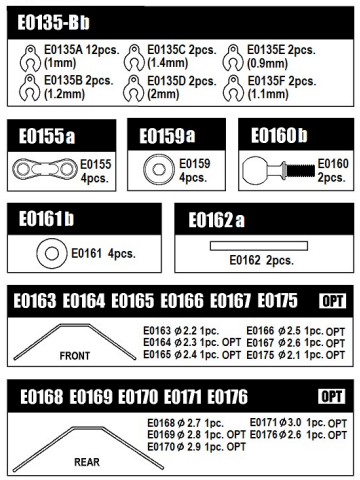

B,C,D-Parts

B0104 FUEL FILTER S
B0123 AIR FILTER SET
B0124 AIR FILTER ELEMENTS
B0431a 3mm CONE WASHER
B0432 ANTENNA CAP (5pcs.)
C0107Db PIVOT BALL ϕ7mm
C0264 JOINT SHAFT
C0270b JOINT PIN(FOR E2228/E2229/E2261/E2262)
C0271b JOINT PIN(FOR E2218/E2219/E0222)
C0529Ab LINK BALL
C0601 BEARINGS(8x16x5) 2pcs.
C0601/1a BEARINGS(8x16x5) 10pcs.
C0605 BEARINGS(6x10x3) 2pcs.
C0801Hb PIVOT BUSH
D0602 BEARINGS(6x13x5) 2pcs.
D0807a BODY PIN 15/21

E-Parts

E0135-Bb SUS. ARM SPACER
E0155a ANTI ROLL BAR LINK
E0159a ADJUST NUT
E0160b FRONT LOWER KINGPIN BALL
E0161b FRONT TRACK WIDTH ADJUST SPACER
E0162a FRONT UPPER ARM SHAFT
E0163 FRONT ANTI ROLL BAR ϕ2.2mm
E0164 FRONT ANTI ROLL BAR ϕ2.3mm
E0165 FRONT ANTI ROLL BAR ϕ2.4mm
E0166 FRONT ANTI ROLL BAR ϕ2.5mm
E0167 FRONT ANTI ROLL BAR ϕ2.6mm
E0168 REAR ANTI ROLL BAR ϕ2.7mm
E0169 REAR ANTI ROLL BAR ϕ2.8mm
E0170 REAR ANTI ROLL BAR ϕ2.9mm
E0171 REAR ANTI ROLL BAR ϕ3.0mm

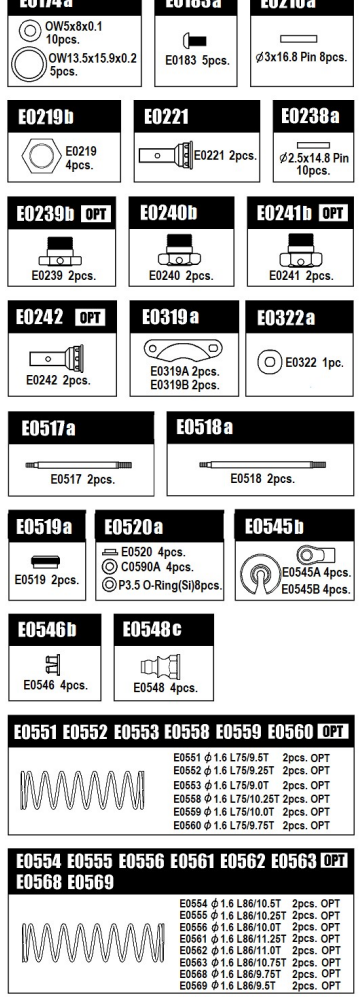

E0174a WASHER SET
E0175 FRONT ANTI ROLL BAR ϕ2.1mm
E0176 REAR ANTI ROLL BAR ϕ2.6mm
E0183a REBOUND STOP ADJ. SCREW
E0210a ϕ3x16.8 PIN (8pcs.)
E0219b SELF-LOCK WHEEL NUT
E0221 F/R AXLE SHAFT
E0238a JOINT PIN (ϕ2.5x14.8)(FOR E0220/E0221/E0242)
E0239b WHEEL HUB
E0240b WIDE OFFSET WHEEL HUB 1mm
E0241b WIDE OFFSET WHEEL HUB 2mm
E0242 AL. F/R AXLE SHAFT
E0319a BRAKE PAD
E0322a RADIO BOX GROMMET
E0517a FRONT DAMPER SHAFT
E0518a REAR DAMPER SHAFT
E0519a OIL SEAL CAP
E0520a OIL SEAL SET
E0545b DAMPER END PARTS
E0546b DAMPER MOUNT PIVOT BUSH
E0548c DAMPER MOUNT PIVOT
E0551 FRONT DAMPER SPRING ϕ1.6 L75/9.5T
E0552 FRONT DAMPER SPRING ϕ1.6 L75/9.25T
E0553 FRONT DAMPER SPRING ϕ1.6 L75/9.0T
E0558 FRONT DAMPER SPRING ϕ1.6 L75/10.25T
E0559 FRONT DAMPER SPRING ϕ1.6 L75/10.0T
E0560 FRONT DAMPER SPRING ϕ1.6 L75/9.75T
E0554 REAR DAMPER SPRING ϕ1.6 L86/10.5T
E0555 REAR DAMPER SPRING ϕ1.6 L86/10.25T
E0556 REAR DAMPER SPRING ϕ1.6 L86/10.0T
E0561 REAR DAMPER SPRING ϕ1.6 L86/11.25T
E0562 REAR DAMPER SPRING ϕ1.6 L86/11.0T
E0563 REAR DAMPER SPRING ϕ1.6 L86/10.75T
E0568 REAR DAMPER SPRING ϕ1.6 L86/9.75T
E0569 REAR DAMPER SPRING ϕ1.6 L86/9.5T

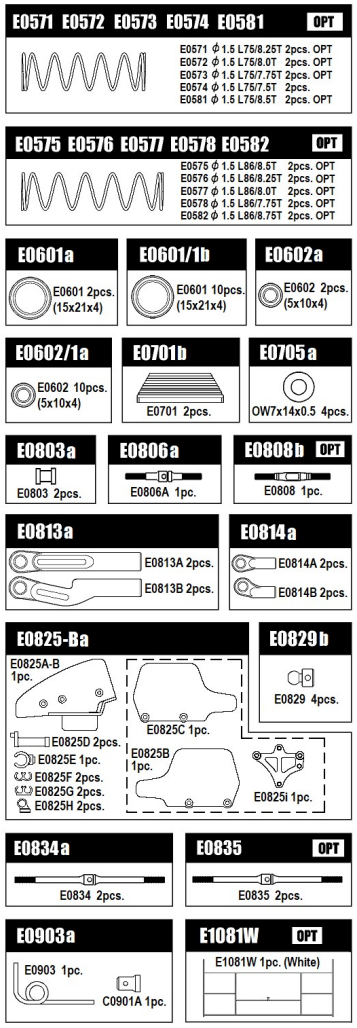

E0571 FRONT DAMPER SPRING ϕ1.5 L75/8.25T
E0572 FRONT DAMPER SPRING ϕ1.5 L75/8.0T
E0573 FRONT DAMPER SPRING ϕ1.5 L75/7.75T
E0574 FRONT DAMPER SPRING ϕ1.5 L75/7.5T
E0581 FRONT DAMPER SPRING ϕ1.5/8.5T
E0575 REAR DAMPER SPRING ϕ1.5 L86/8.5T
E0576 REAR DAMPER SPRING ϕ1.5 L86/8.25T
E0577 REAR DAMPER SPRING ϕ1.5 L86/8.0T
E0578 REAR DAMPER SPRING ϕ1.5 L86/7.75T
E0582 REAR DAMPER SPRING ϕ1.5 L86/8.75T
E0601a BEARINGS(15x21x4)2pcs.
E0601/1b BEARINGS(15x21x4)10pcs.
E0602a BEARINGS(5x10x4) 2pcs.
E0602/1a BEARINGS(5x10x4) 10pcs.
E0701b ENGINE MOUNT
E0705a FLY WHEEL WASHER
E0803a FUEL TANK BUSH
E0806a TURNBUCKLE ROD 35mm
E0808b TITANIUM TURNBUCKLE ROD 35mm
E0813a REAR UPPER ARM LINK
E0814a BALL LINK ϕ7mm
E0825-Ba FUEL GUARD
E0829b ANTI-ROLL BAR LINK BALL
E0834a STEERING ROD 90
E0835 TITANIUM STEERING ROD 90
E0903a MUFFLER STAY
E1081W REAR WING (WHITE)

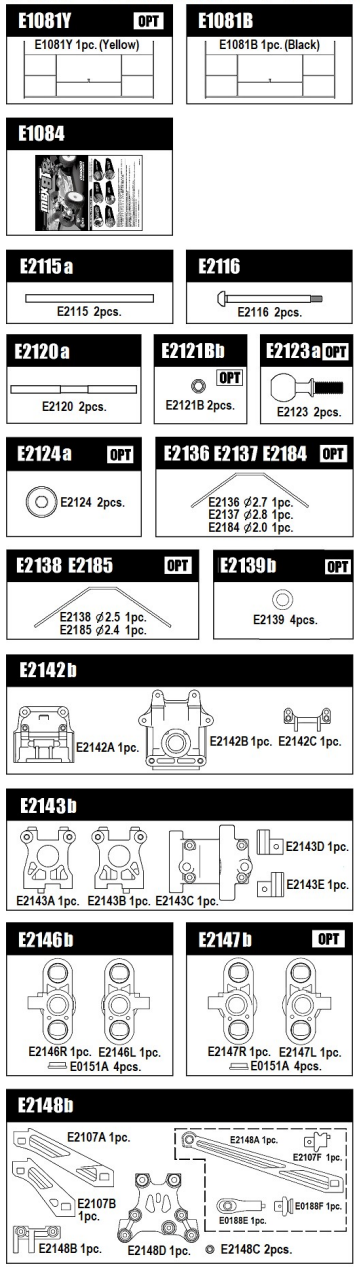

E1081Y REAR WING (YELLOW)
E1081B REAR WING (BLACK)
E1084 MBX8TR INSTRUCTION MANUAL
E2115a FRONT LOWER ARM SHAFT
E2116 REAR LOWER ARM SHAFT S
E2120a REAR LOWER ARM SHAFT L
E2121Bb SERVO SAVER SPACER(FOR E2121/E2158)
E2123a KINGPIN BALL (STEEL)
E2124a ADJUST NUT (STEEL)
E2132a FRONT ANTI ROLL BAR ϕ2.7mm
E2137 FRONT ANTI ROLL BAR ϕ2.8mm
E2138 REAR ANTI ROLL BAR ϕ2.5mm
E2139b FRONT TRACK WIDTH ADJUST SPACER(0.5mm)
E2142b GEAR BOX
E2143b CENTER DIFF. MOUNT
E2146b FRONT UPRIGHT
E2147b FRONT UPRIGHT(1.5)
E2148b TENSION ROD

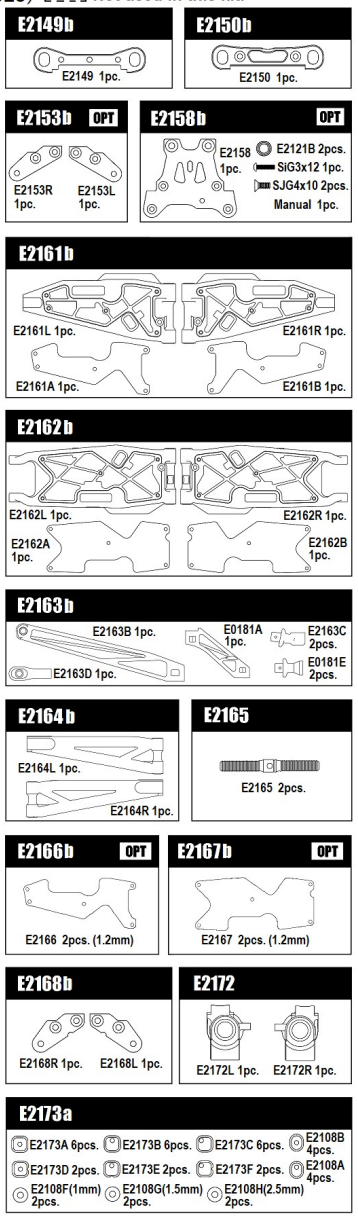

E2149b FRONT LOWER ARM MOUNT F
E2150b FRONT LOWER ARM MOUNT R
E2153b FRONT UPRIGHT ARM (CFRP)
E2158b FRONT UPPER PLATE (CFRP)
E2161b FRONT LOWER ARM
E2162b REAR LOWER ARM
E2163b TENSION ROD
E2164b FRONT UPPER ARM
E2165 REAR UPPER ARM ROD 47
E2166b FRONT LOWER ARM PLATE(1.2mm)CFRP
E2167b REAR LOWER ARM PLATE(1.2mm)CFRP
E2168b FRONT UPRIGHT ARM (−3)
E2172 REAR HUBS
E2173a ARM MOUNT INSERT SET

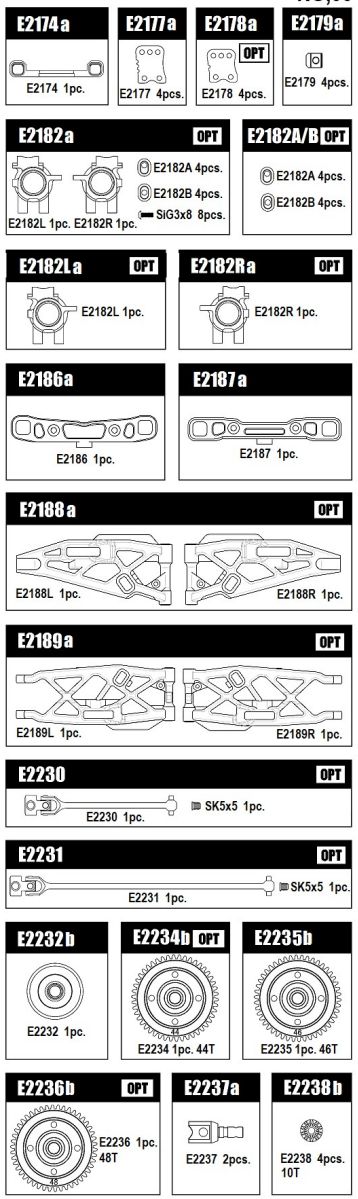

E2174a FRONT LINK MOUNT
E2177a REAR LINK PLATES (+3)
E2178a REAR LINK PLATES (0)
E2179a ANTI-ROLL BAR STOPPER
E2182a AL. REAR HUB SET
E2182A/B AL. REAR HUB BUSH SET
E2182La AL. REAR HUB (L)
E2182Ra AL. REAR HUB (R)
E2184 FRONT ANTI-ROLL BAR (ϕ2.0mm)
E2185 REAR ANTI-ROLL BAR (ϕ2.4mm)
E2186a REAR LOWER ARM MOUNT F
E2187a REAR LOWER ARM MOUNT R
E2188a LW FRONT LOWER ARMS
E2189a LW REAR LOWER ARMS
E2230 CENTER UNIVERSAL JOINT F (82.5)
E2231 CENTER UNIVERSAL JOINT R (156.5)
E2232b DIFF. CASE (H.T. DIFF.)
E2234b SPUR GEAR 44T (H.T. DIFF.)
E2235b SPUR GEAR 46T (H.T. DIFF.)
E2236b SPUR GEAR 48T (H.T. DIFF.)
E2237a DIFF. CUP JOINT (H.T. DIFF.)
E2238b DIFF. GEAR 10T (H.T. DIFF.)

1/8th Scale Gas Powered Racing Truggy MBX8TR Parts List (E2029)

1/8スケール MBX8TR パーツリスト (E2029) ▭ Not used in this kit.

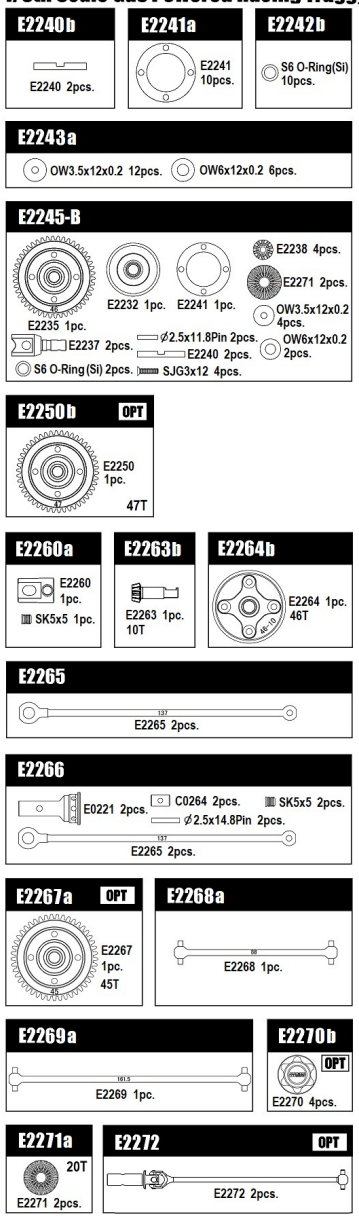

E2240b DIFF. SHAFT (H.T. DIFF.)
E2241a GASKET FOR DIFF. (H.T. DIFF.)
E2242b S6 O-RINGS Si (H.T. DIFF.)
E2243a DIFF. WASHER SET (H.T. DIFF.)
E2245-B CENTER DIFF. SET (46T)
E2250b SPUR GEAR 47T (H.T. DIFF.)
E2260a CENTER JOINT CUP
E2263b BEVEL GEAR 10T
E2264b CONICAL GEAR 46T
E2265 F/R DRIVE SHAFT (137)
E2266 F/R UNIVERSAL JOINT SET
E2267a SPUR GEAR 45T (H.T. DIFF.)
E2268a CENTER DRIVE SHAFT (88)
E2269a CENTER DRIVE SHAFT (161.5)
E2270b CLOSED WHEEL NUT
E2271a DIFF. GEAR 20T
E2272 F/R UNIVERSAL JOINT

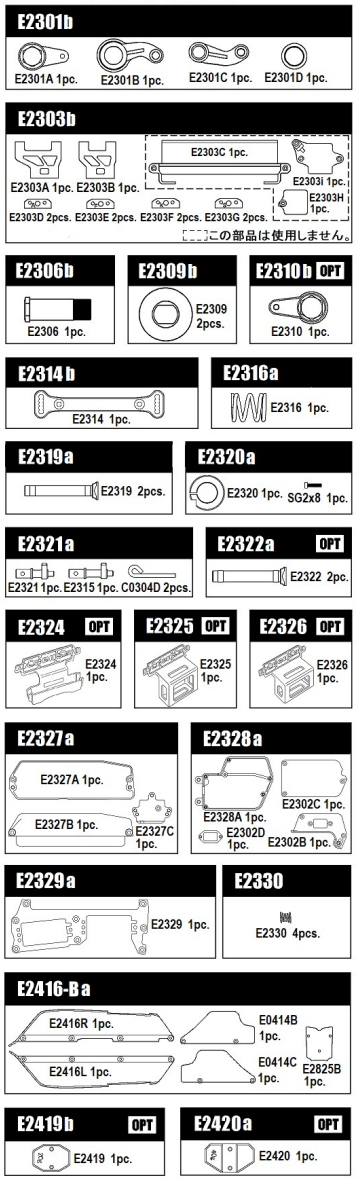

E2301b SERVO SAVER
E2303b RADIO PLATE MOUNT
E2306b SERVO SAVER PIPE
E2309b BRAKE DISC
E2310b AL. SERVO SAVER ARM
E2314b STEERING PLATE
E2316a SERVO SAVER SPRING (HARD)
E2319a SERVO SAVER SHAFT
E2320a SERVO SAVER SPRING ADJUSTER
E2321a BRAKE CAM
E2322a SERVO SAVER SHAFT (ALUM)
E2324 BATTERY CONNECTOR HOLDER
E2325 ELECTRIC SWITCH HOLDER (FUTABA,SANWA)
E2326 ELECTRIC SWITCH HOLDER (Protek,G-Force)
E2327a BATTERY BOX (Large)
E2328a RECEVER BOX
E2329a RADIO TRAY
E2330 BRAKE PAD SPRINGS
E2416-Ba STONE GUARD
E2419b WEIGHT 20g
E2420a WEIGHT 40g

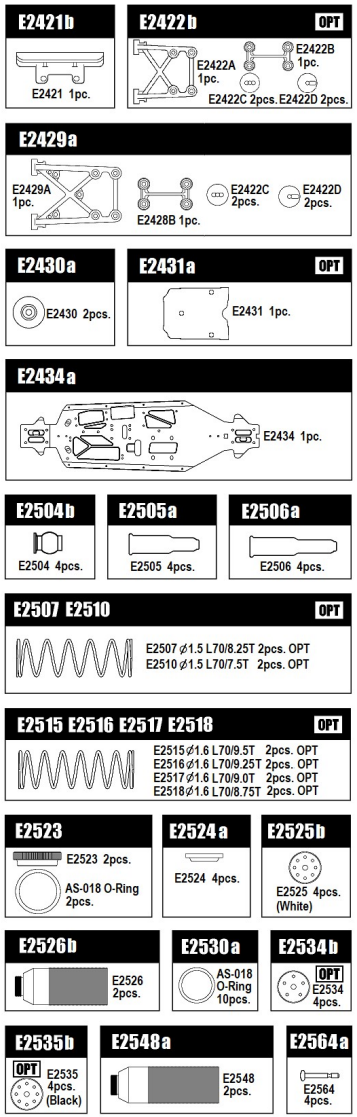

E2421b FRONT BUMPER
E2422b REAR WING STAY
E2429a REAR WING MOUNT (+15)
E2430a AL. WING BUTTONS
E2431a REAR WING MOUNT PLATE CFRP
E2434a CHASSIS
E2504b DAMPER END BALL
E2505a DAMPER BOOTS S
E2506a DAMPER BOOTS L
E2507 FRONT DAMPER SPRING φ1.5 L70/8.25T
E2510 FRONT DAMPER SPRING φ1.5 L70/7.5T
E2515 FRONT DAMPER SPRING φ1.6 L70/9.5T
E2516 FRONT DAMPER SPRING φ1.6 L70/9.25T
E2517 FRONT DAMPER SPRING φ1.6 L70/9.0T
E2518 FRONT DAMPER SPRING φ1.6 L70/8.75T
E2523 DAMPER SPRING ADJUSTER
E2524a DIAPHRAGM
E2525b DAMPER PISTON (φ1.3/8H)
E2526b FRONT DAMPER CASE
E2530a AS-018 O-RINGS
E2534b DAMPER PISTON (φ1.35/5H)
E2535b DAMPER PISTON (φ1.2/8H)
E2548a REAR DAMPER CASE
E2564a SHOCK PIN

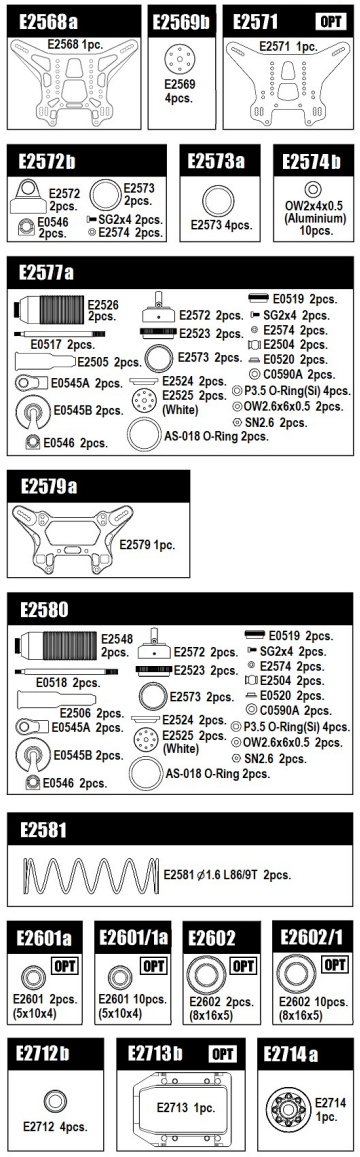

E2568a REAR DAMPER STAY
E2569b DAMPER PISTON (φ1.3/6H)
E2571 REAR DAMPER STAY CFRP
E2572b EMULSION DAMPER CAP
E2573a EMULSION DAMPER CAP SEAL
E2574b OW2x4x0.5 AL. WASHER
E2577a FRONT SHOCK SET
E2579a FRONT SHOCK TOWER
E2580 REAR SHOCK SET
E2581 REAR SHOCK SPRING φ1.6 L86/9T
E2601a 5x10x4 NMB BEARINGS (2pcs.)
E2601/1a 5x10x4 NMB BEARINGS (10pcs.)
E2602 8x16x5 NMB BEARINGS (2pcs.)
E2602/1 8x16x5 NMB BEARINGS (10pcs.)
E2712b ENGINE MOUNT WASHER
E2713b ONE-PIECE ENGINE MOUNT
E2714a FLYWHEEL (4-shoe)

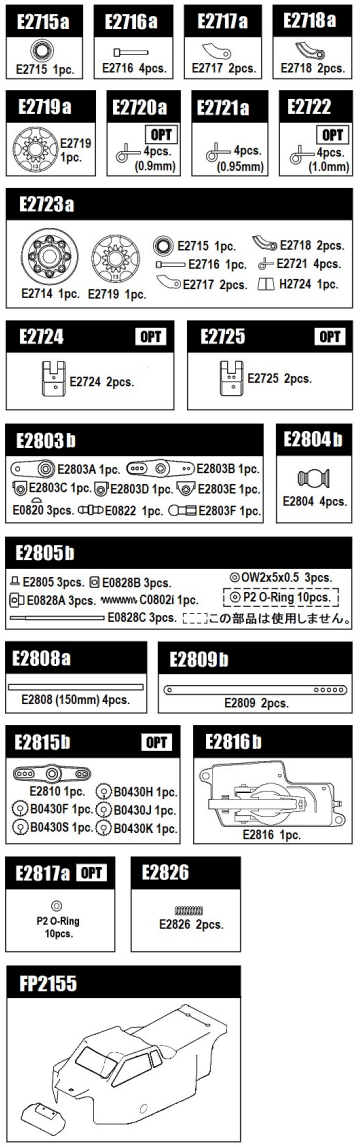

E2715a FLYWHEEL NUT (4-shoe)
E2716a CLUTCH PINS (4-shoe)
E2717a CARBON CLUTCH SHOES (4-shoe)
E2718a AL. CLUTCH SHOES (4-shoe)
E2719a CLUTCH BELL 13T (4-shoe)
E2720a CLUTCH SPRINGS 0.9mm (4-shoe)
E2721a CLUTCH SPRINGS 0.95mm (4-shoe)
E2722 CLUTCH SPRINGS 1.0mm (4-shoe)
E2723a CLUTCH SET (4-shoe)
E2724 AL. CLUTCH SHOES 1dot (4-shoe)
E2725 AL. CLUTCH SHOES 2dot (4-shoe)
E2803b SERVO HORN
E2804b PIVOT BALL
E2805b LINKAGE PARTS
E2808a ANTENNA PIPE (150mm)
E2809b FUEL TANK CAP PULLER
E2815b AL. SERVO HORN TH SET
E2816b FUEL TANK
E2817a P2 O-RINGS
E2826 BRAKE SPRINGS
FP2155 FP01 TRUGGY BODY

H,T-Parts

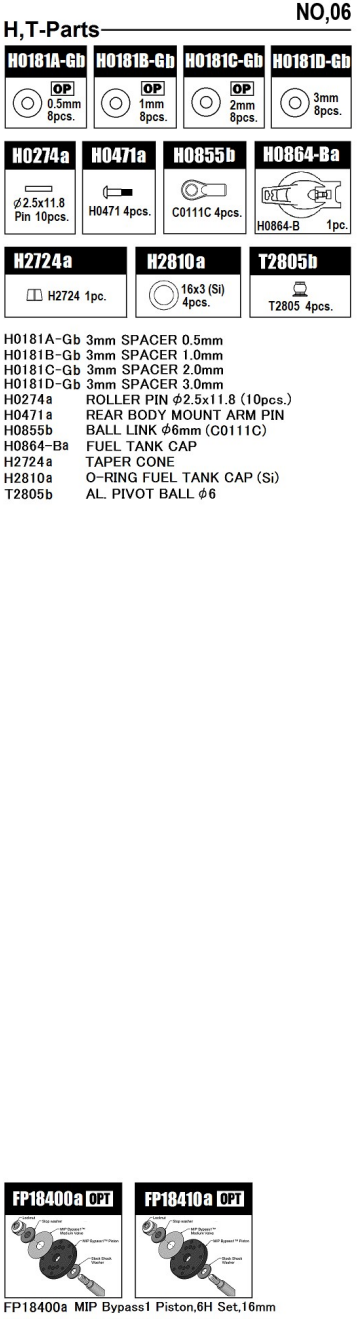

H0181A-Gb 3mm SPACER 0.5mm
H0181B-Gb 3mm SPACER 1.0mm
H0181C-Gb 3mm SPACER 2.0mm
H0181D-Gb 3mm SPACER 3.0mm
H0274a ROLLER PIN φ2.5x11.8 (10pcs.)
H0471a REAR BODY MOUNT ARM PIN
H0855b BALL LINK φ6mm (C0111C)
H0864-Ba FUEL TANK CAP
H2724a TAPER CONE
H2810a O-RING FUEL TANK CAP (Si)
T2805b AL. PIVOT BALL φ6

FP18400a MIP BypassI Piston,6H Set,16mm
FP18410a MIP BypassI Piston,8H Set,16mm

P0402a 12 LOGO STICKER
P0403a 12 LOGO STICKER (METALLIC)

株式会社 無限船橋 〒274-0817 千葉県船橋市高根町1395
MUGEN SEIKI CO.,LTD.
1395 Takane-Cho, Funabashi, Chiba 274-0817, Japan
表示価格はメーカー希望小売価格です。(税別価格)