| | | | | | | | | | |
|---|---|---|---|---|---|---|---|---|---|
| MUGEN SEIKI | | Tires | | Clutch settings | | Front shocks | | Engine | |
| | | Front shore | left ZAC ZBB - / right 813 CSH | Shoe/Bell | Std. / Std. | Piston | ϕ1.1x3 | Type | OS T1201 |
| Date/ Track | 2016/1/11 / SRT | Rear shore | left ZAC ZBB - / right 913 SH | Bell clearance (mm) | 0.5 | Oil | #600 | Plug/ Fuel | Plug RP6 / Fuel Nitrox |
| Driver | Takaaki Shimo | Front ∅ | left 61 / right 61 | Spring/adj. Nut(mm) | Std. / 0.1 | Spring | SMJ Short Pink | Pipe/ Manifold | Pipe T-1070 / Manifold |
| Temp. °C. | air / track | Rear ∅ | left 63 / right 63 | Bell axial play (mm) | 0.2 | Rear shocks | | Gear ratio chart | |
| Track layout/ traction | technical ○ low ○ mixed ◉ medium ○ fast ◉ high ◉ | Differential | | Gearing | | Piston | ϕ1.1x2 | | |
| | | Front diff. oil cst. | #2,000,000 | 1st gear | 15 / 54 | Oil | #600 | | |
| | | Rear diff. oil cst. | #80,000 | 2n gear | 20 / 48 | Spring | SMJ Long Pink | | |

| Spur / Pinion | | 1st 52 | 1st 53 | 1st 54 | 2nd 47 | 2nd 48 | 2nd 49 |
|---|---|---|---|---|---|---|---|
| 1st | 14 | 7,614 | 7,761 | 7,907 | | | |
| | 15 | 7,107 | 7,243 | 7,38 | | | |
| 2nd | 19 | | | | 5,071 | 5,179 | 5,278 |
| | 20 | | | | 4,818 | 4,92 | 5,023 |
| | 21 | | | | 4,588 | 4,686 | 4,783 |

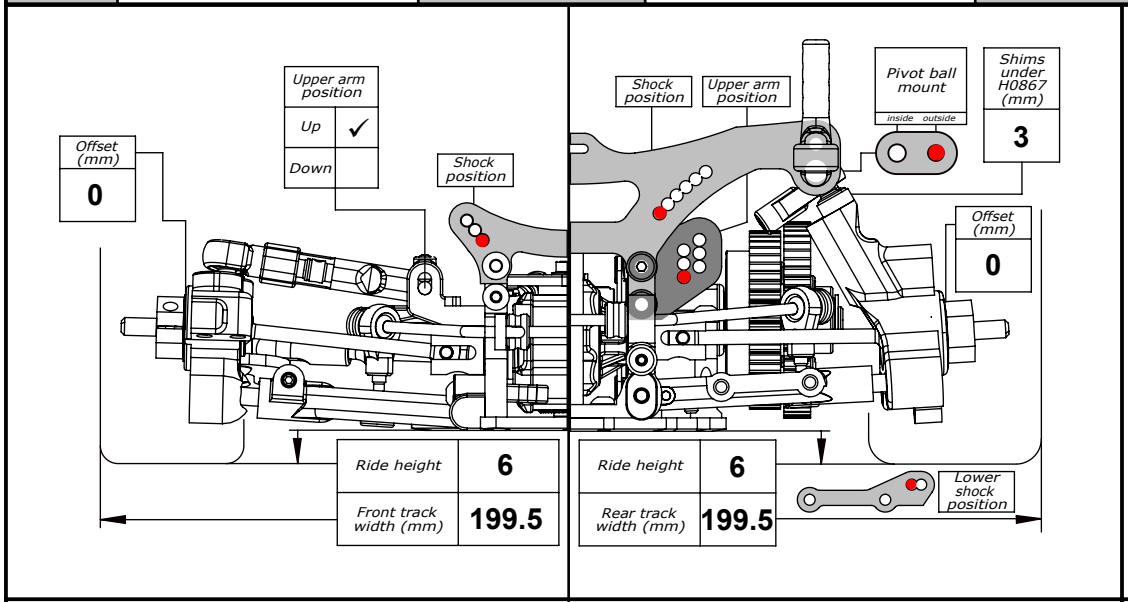


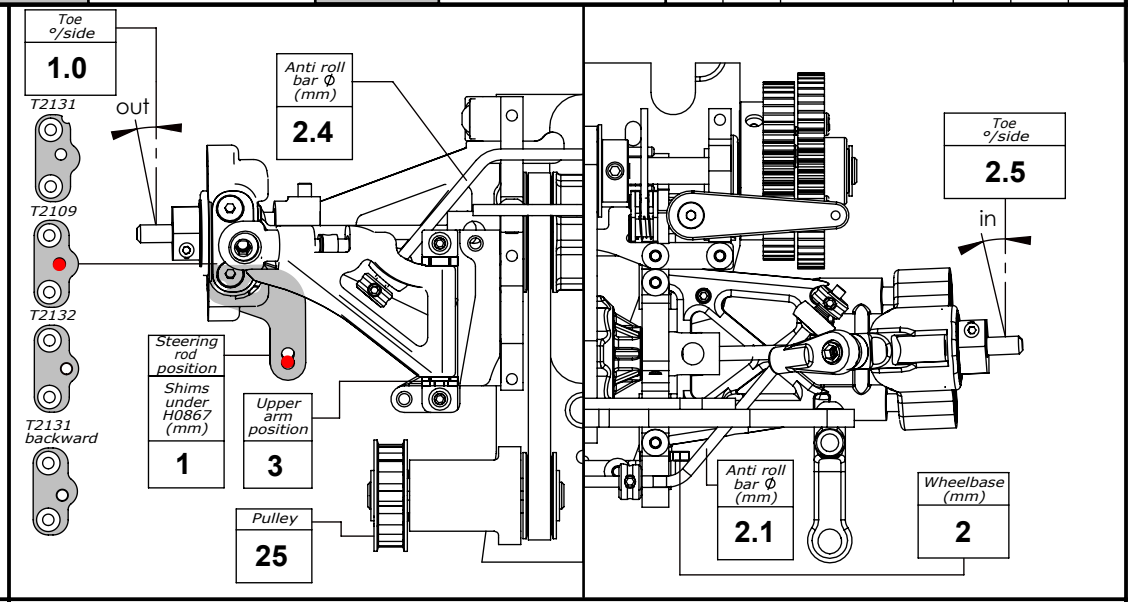


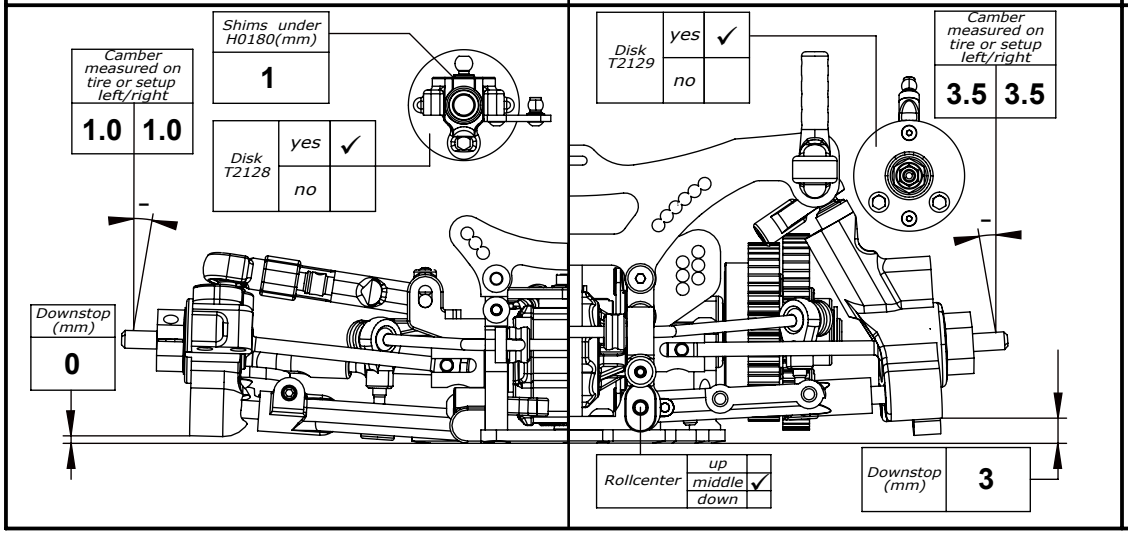


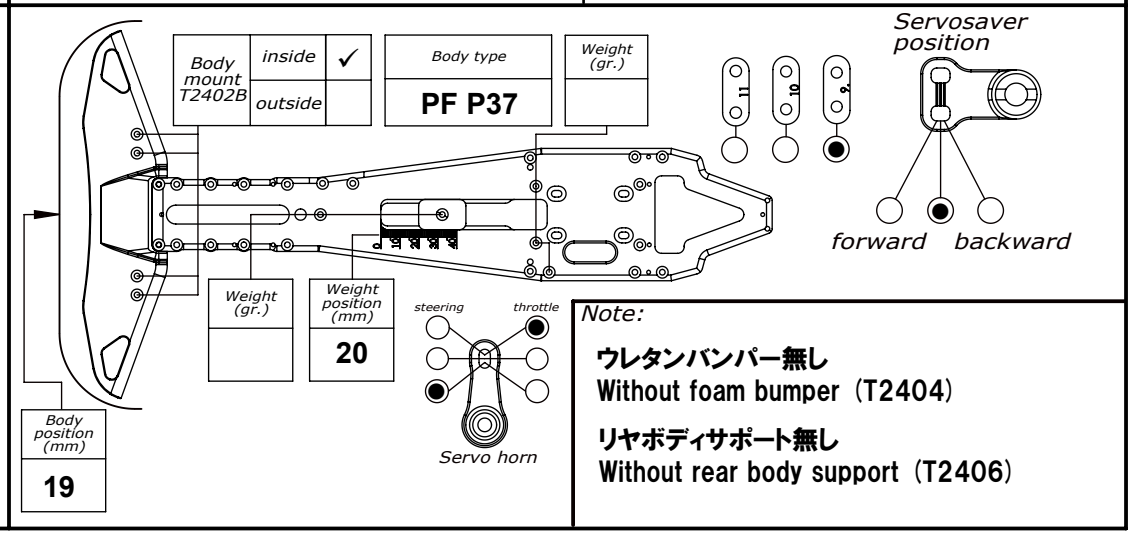


Note:

ウレタンバンパー無し
Without foam bumper（T2404）

リヤボディサポート無し
Without rear body support（T2406）