MSB1 1/10 2WD Electric Buggy

B2001 Ver. 2402

Driver : Kenji Tsuruta
Date : 2024/03/09
Track : CARNOSA RC PARK
Event :

Track Condition

Size :	Open ☐	Mid ☐	Tight ☒
Traction :	High ☒	Mid ☐	Low ☐
Condition :	Smooth ☒	Bumpy ☐	Dry ☐ Wet ☐
Surface :	Carpet ☒	Dirt ☐	Astroturf ☐

Front Suspension

Ride Height : 14.5mm

Camber : 2°

Toe : 0

Anti-roll Bar : 1.0mm

Front Bulkhead Spacer :

Plastic 2 mm / Brass mm

Notes :

All aluminum steering parts.
B2706, B2707, B2708, B2709

Shock pivot ball position: Forward

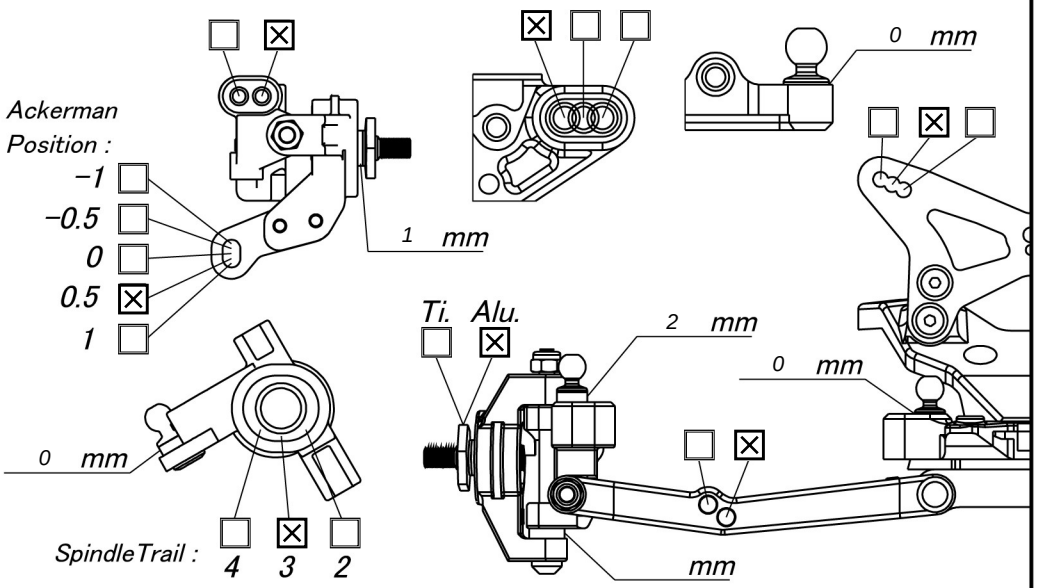

Rear Suspension

Ride Height : 15

Camber : 2°

Anti-roll Bar : 1.4mm

Arm Position : Fwd ☒ Back ☐

Hub Position : Fwd ☐ Mid ☒ Back ☐

Notes :

Shock pivot position : Forward

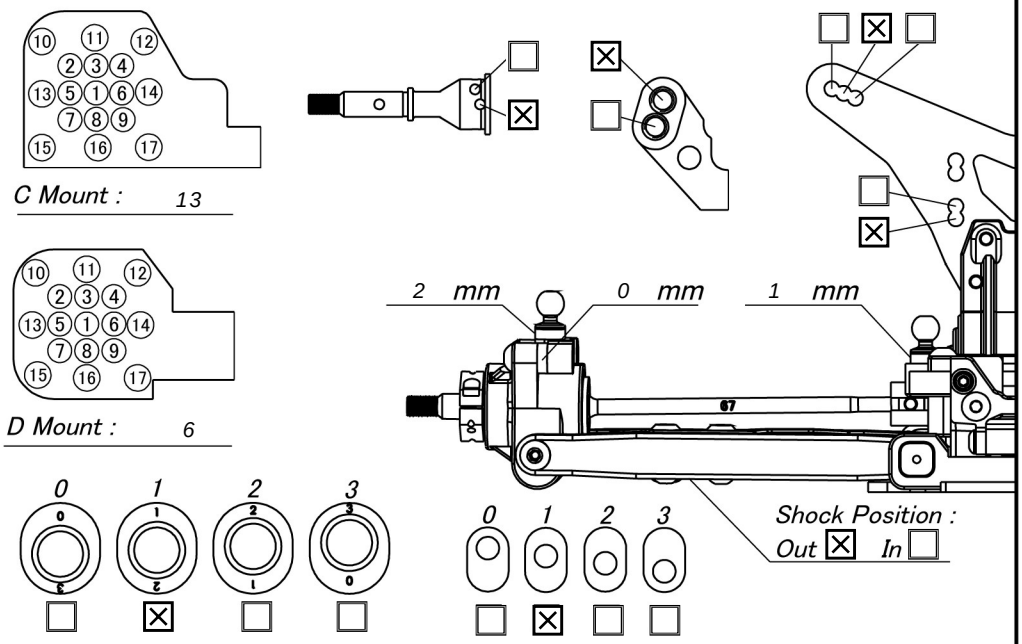

Shocks	Front	Rear
Piston :	1.6x4	1.7x4
Oil :	700	600
Spring :	4 Dots	3 Dots
Length :	25.5mm	30.5mm
Limiters :	Int : 0 Ext : 3	Int : 0 Ext : 0
Eyelet Lenght :	Std ☒ +2 ☐	Std ☒ +2 ☐
Cup Offset :	Low ☐ Mid ☐ High ☒	Low ☐ Mid ☒ High ☐

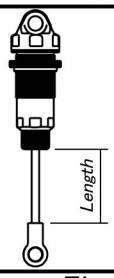

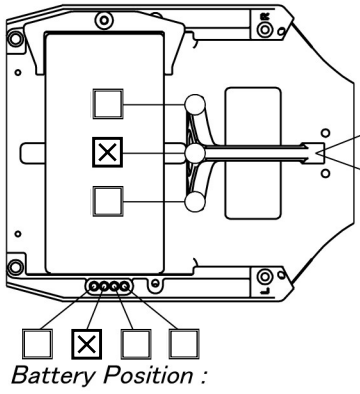

Chassis Brace Bush Type :
☐ Plastic
☒ Rubber

ESC Plate :
☐ Plastic
☐ Carbon
☒ Brass

Total Weight : g

Electronics

Radio :	10PX
Servo :	CT702
ESC :	HW
Motor :	HW6.5T
Gearing :	78 / 22
Battery :	RICKSIDE / g

Weight

Servo Weight :	Yes ☐	No ☒
Battery Weight :	19g ☐	37g ☒

Differential

Gear Diff ☒	2 Gear ☒	Oil :	10000
	4 Gear ☐	Friction O-ring :	
Ball Diff ☐	Setting :		

Tire	Front	Rear
Type :	Schumacher	Schumacher
Compound :		
Inserts :		
Wheel :		
Additive :		

Body & Wing

Body :	Standard		
Rear Wing :	Standard/ Cut 4mm from the cut line		
Wing Angle :	0° ☐	3° ☒	6° ☐
Front Wing :	Standard	Low : ☒	High : ☐