mugen seiki		Tires		Clutch settings		Front shocks		Engine	
		Front shore	left 32 / right 32	Shoe / Bell	Alu Cap	Piston	1 standard	Type	Picco torque
Date/ Track	EC Ettlingen	Rear shore	left 35 / right 35	Bell clearance (mm)	0,6	Oil	600	Plug/ Fuel	Plug P7TC / Fuel Maxima
Driver	Robert Pietsch	Front ∅	left 69 / right 69	Spring/adj. Nut(mm)	kit / 0,5mm	Spring	yellow	Pipe/ Manifold	Pipe 2033 / Manifold short
Temp. °C.	air / track	Rear ∅	left 76 / right 76	Bell axial play (mm)	0,1-0,2	Rear shocks		Gear ratio chart	
Track layout/ traction	technical ○ low ○	Body		Gearing		Piston	2 standard		
	mixed ● medium ●	Type	PFR18	1st gear	16 / 50	Oil	700		
	fast ○ high ○	Wing position (mm)	8	2n gear	20 / 46	Spring	grey		

		1st			2nd		
		48	49	50	45	46	47
1st	16	7,2	7,35	7,5			
	17	6,776	6.918	7,059			
2nd	19				5,684	5,811	5,937
	20				5,4	5,52	5,64
	21				5,143	5,257	5,371

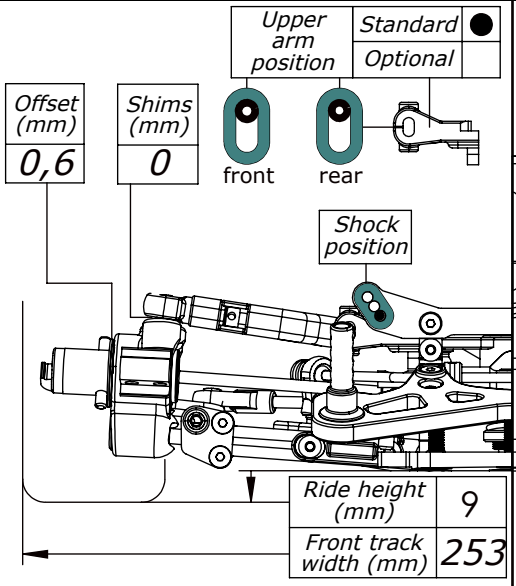

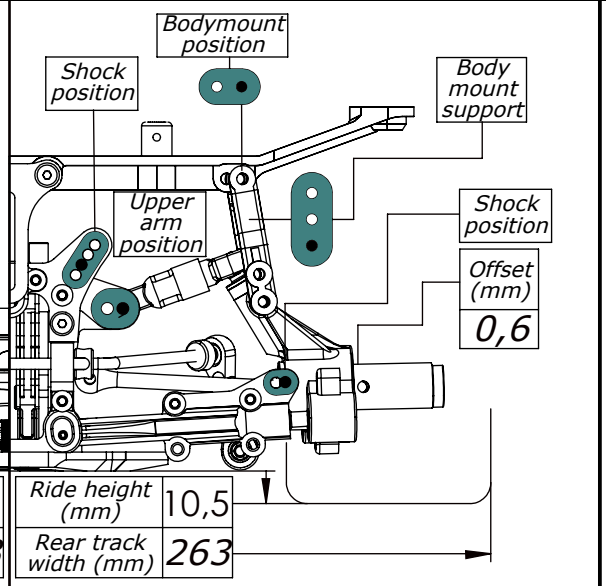

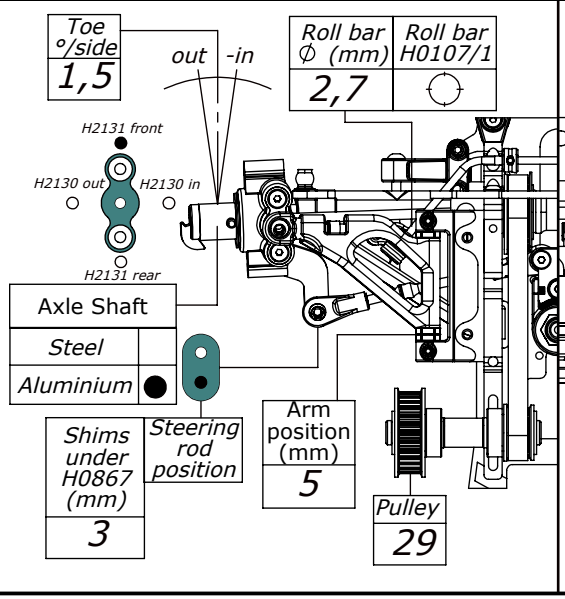

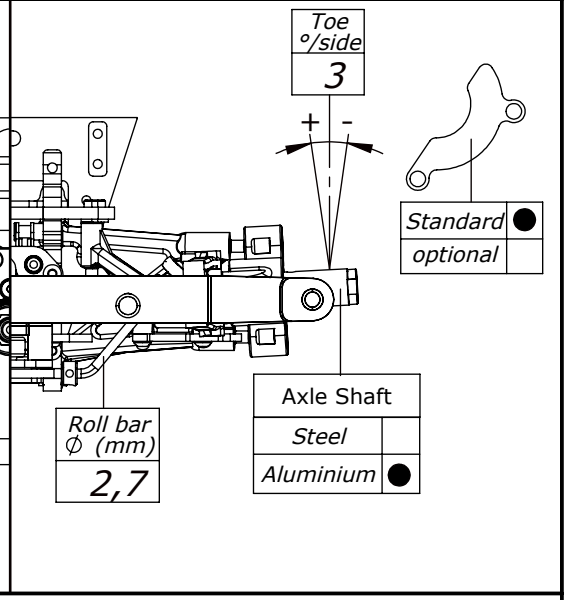

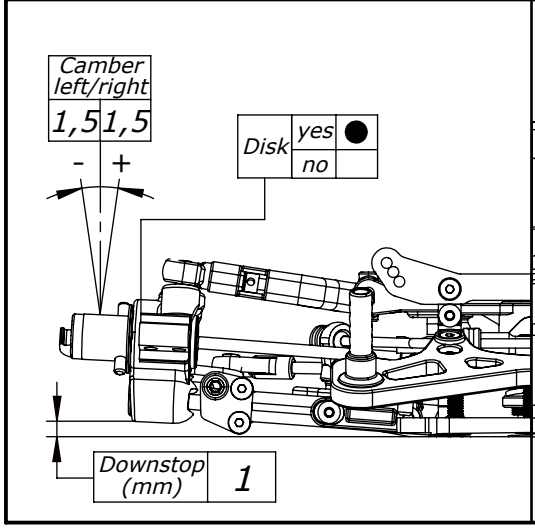

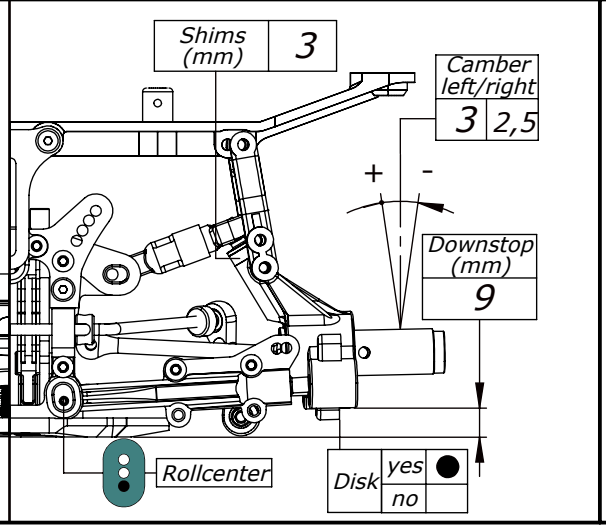

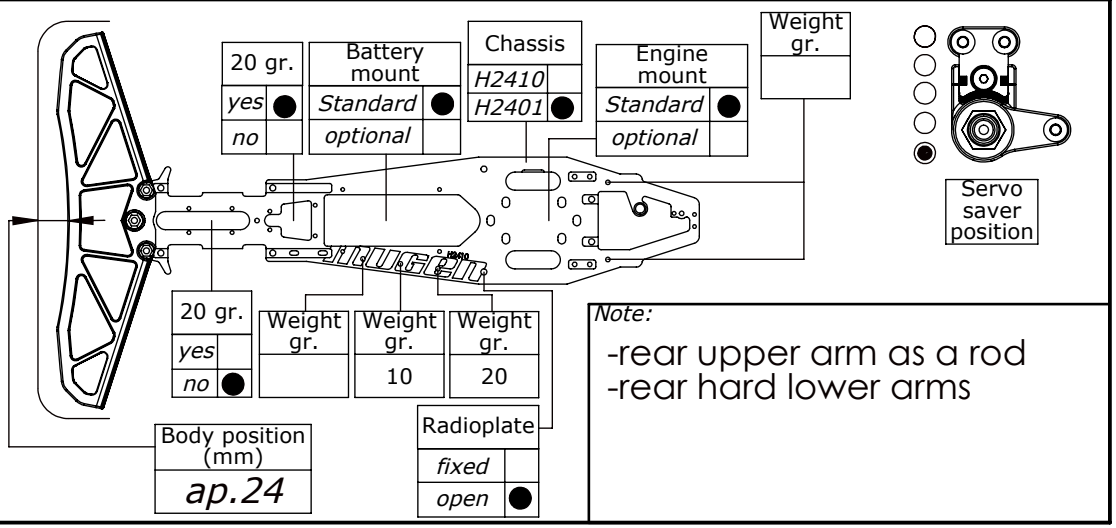

Note:

-rear upper arm as a rod
-rear hard lower arms